50MM DOUBLEDISC MB50 BALUSTRADE SYSTEM

Installation / Fitting Instructions

SIDE FIX
(MB50) – Heavy Weight Anchor

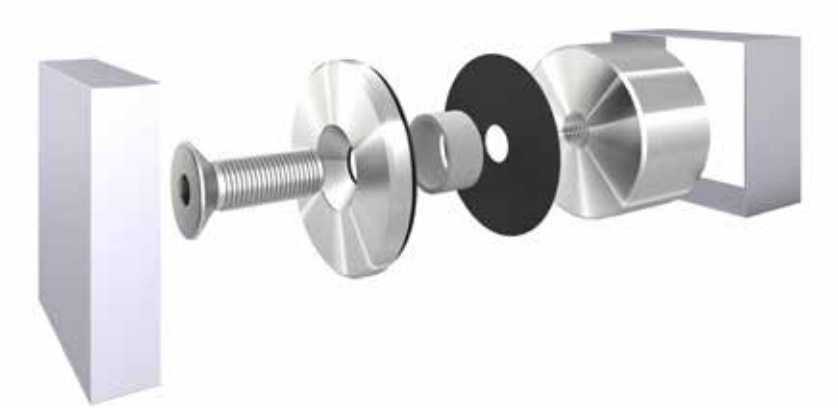

Product	Installation/Fitting Instructions
Structure Fastening Installation Typical Layout of MB50 – Double Disc Anchors. 	• Verify the deck capacity can withstand the loads required for installation prior to fixing balustrade. • Using laser level or string line, cast level lines horizontally and vertically to find the centre points of the fastenings required for the building structure as detailed in the PS1. – Minimum edge distance from top of structure to centre line of fixing is 50mm. – Fixing layout centres are calculated as: 200mm in from glass edges; Equal spacing's between corner fixings to match PS1 design tables. – Height distances between rows are calculated as: 75mm for Residential purposes; 100mm for Commercial purposes.
Backing Disc Installation Structural fastening into backing Disc Tolerance. 	• Install fastenings as per the given PS1 for structure type. • Fix MB50 backing disc to the fastening, tightening to 40Nm (If using the square cover kit option insert this as required). – Ensure the backing discs are all on a level plane. If the building structure is not level: – For MB50 Heavy Weight Anchor – add fibre gaskets (3 gaskets max.) or additional custom disc to a maximum of 100mm. – For MB50 Adjustable Heavy Weight Anchor – adjust the backing disc within its designed tolerance of 10mm.

IMPORTANT NOTE: The guide above is simplified, and should in no way be referenced in isolation. For full comprehensive substrate fixing details please refer through to the PS1.

50MM DOUBLEDISC MB50 BALUSTRADE SYSTEM

Installation / Fitting Instructions

Product	Installation/Fitting Instructions
Glass Installation 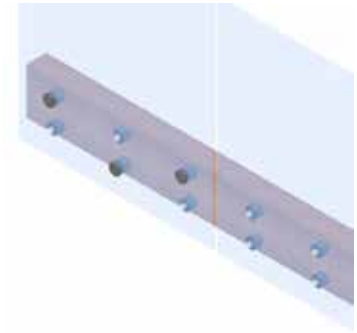	• NOTE: when ordering glass ensure the hole diameters are 26mm. • Check that the hole locations in the glass panels align with the backing disc fastening locations. – MB50 Adjustable Heavy Weight Anchor comes with preformed 15mm diameter bush. Tolerance is taken up in the 20mm diameter glass hole. – MB50 Heavy Weight Anchor M10 bushes should be changed to BE20-M10 (eccentric) or BS20-M10 (slotted) bushes to allow for 2.0mm adjustment horizontally if required. • Install glass panels. – For MB50 Heavy Weight Anchor – use black fibre gasket to backing disc surface, suitable bush for tolerance (thickness to suit the glass t), black fibre gasket to outer disc and M10 fastening (length to suit the glass t). – M10 fastening must not clash with building structure fastening inside the backing disc. – For MB50 Adjustable Heavy Weight Anchor – use gaskets and M10 fastening supplied with the anchor. Fix the MB50 front disc through the glass panel to the backing disc, tightening to 40Nm (If using the square cover kit option insert this as required).
Final Adjustment 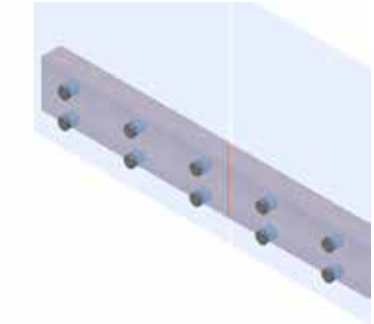	1. Check Glass panel gaps, levels and alignments of frit or similar pattern details. Align with setting blocks and/ or spacers to suit. 2. Check MB50 Double Disc anchors have been torqued to 40Nm.
Cleaning	Once everything is correctly in place and the job is complete, the glass and disc need to be cleaned. Use a non-abrasive glass cleaner on the glass and warm soapy water on the MB50 disc. We also recommend a soft sponge or cloth, again to avoid any risk of scratching. For full care and maintenance guidelines please refer to our comprehensive guide pages 778-779.

IMPORTANT NOTE: The guide above is simplified, and should in no way be referenced in isolation. For full comprehensive substrate fixing details please refer through to the PS1.

50MM DOUBLEDISC MB50 BALUSTRADE SYSTEM

Section & Exploded Views

DOUBLEDISC MB50 STANDARD FITTING SECTION VIEW

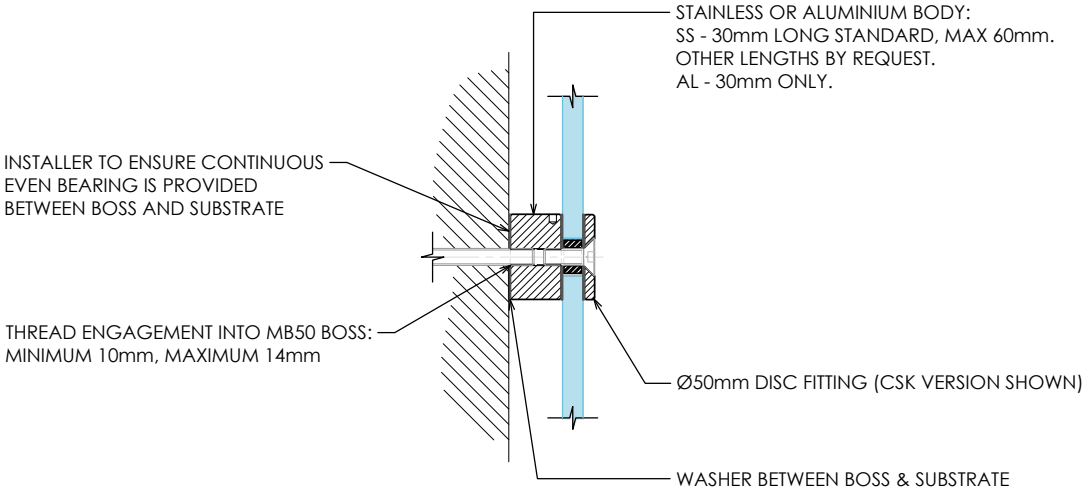

DOUBLEDISC MB50 STANDARD FITTING EXPLODED VIEW

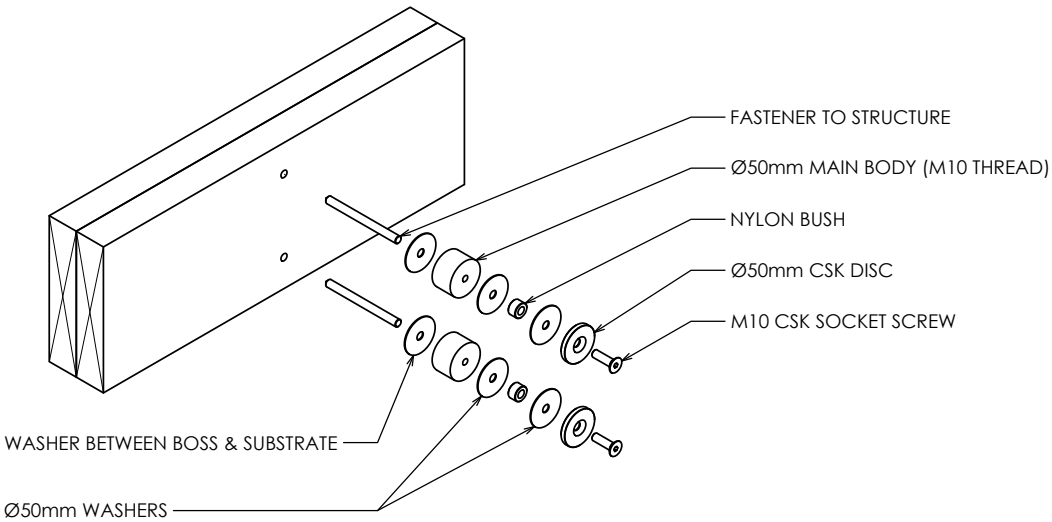

50MM DOUBLEDISC MB50 BALUSTRADE SYSTEM

Concrete Fixing Detail

Drawing No.	Revision	Fixing Type	Occupancy
MB50 / C / RA	R10	MB50 with rod anchor	A, B, E, C3

NOT SUITABLE FOR OCCUPANCY C1/C2, D OR C5

REFER TO DOUBLE DISC MB50 BALUSTRADE SYSTEM DESIGN TABLE FOR REQUIRED GLASS THICKNESS, FIXING SPACINGS AND FIXING LOADS ACCORDING TO AS/NZS 1170.1:2002 FOR THE OCCUPANCIES LISTED ABOVE.

NOTES: REFER TO DESIGN TABLES AND ELEVATIONS FOR POST FAILURE REQUIREMENTS. INTERLINKING RAIL / CLIPS NOT SHOWN FOR CLARITY.
'H' REFERS TO TOP OF BARRIER.

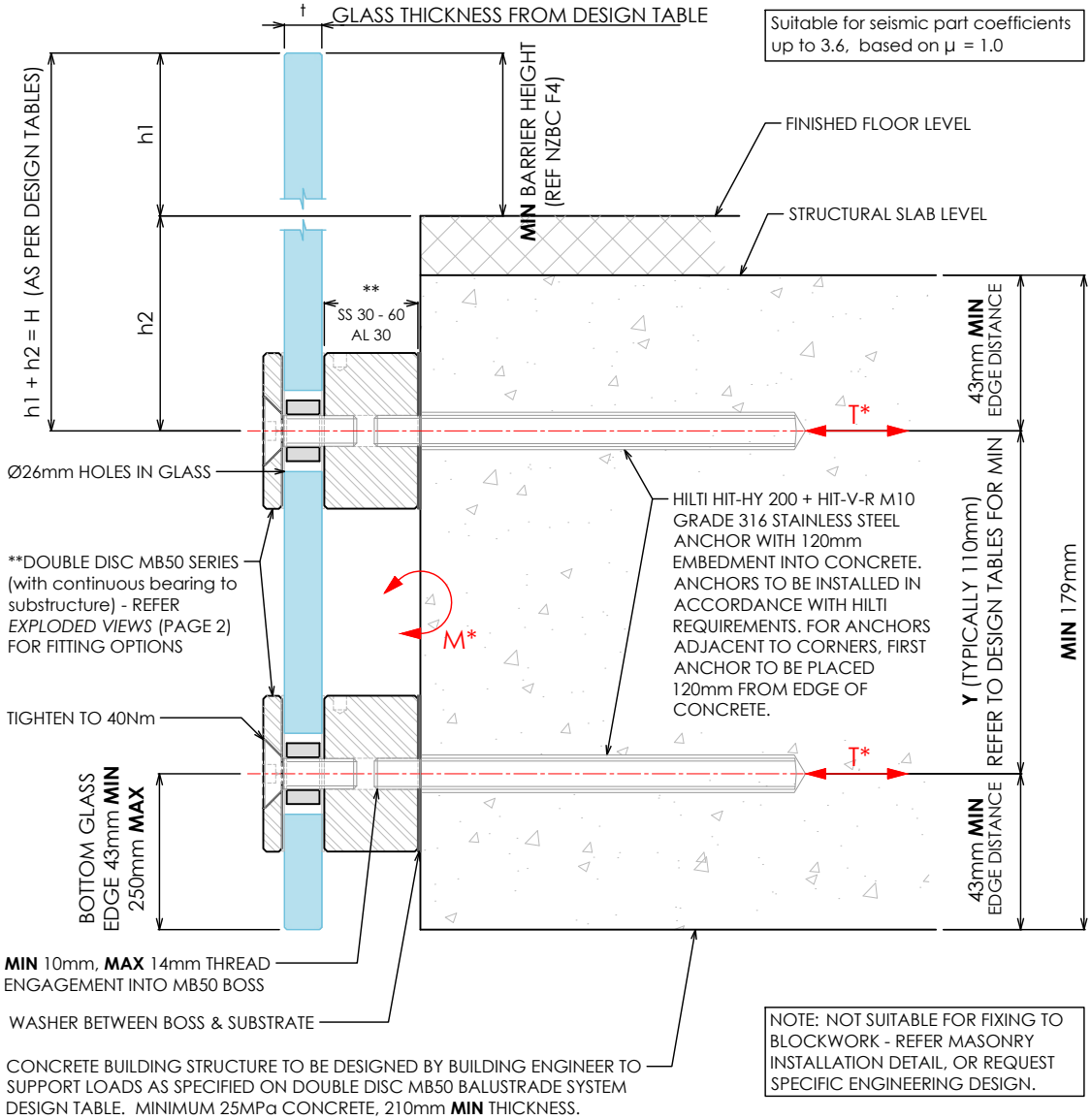

NOTES:
1) Capacity of structure is to be of sufficient strength to support loads M* and T* specified on Double Disc MB50 balustrade system design table. Structure capacity to be verified by building engineer prior to fixing balustrade.
2) Max loading to comply with AS/NZS 1170.1:2002 minimum imposed actions for barriers occupancy, shown at top of drawing, for design in accordance with Double Disc MB50 balustrade system design table.
3) Penetration through a membrane must be completed in accordance with written instructions of the membrane manufacturer.
4) No substitution allowed - any variation from the details above and design tables will require specific design.
5) Substructure designed to ensure that there is no water runoff from dissimilar metals or treated timber onto barrier components.

50MM DOUBLEDISC MB50 BALUSTRADE SYSTEM

Block Wall Fixing Detail

Drawing No.	Revision	Fixing Type	Occupancy
MB50 / M / RA	R10	MB50 with rod anchor	A, B, E, C3

NOT SUITABLE FOR OCCUPANCY C1/C2, D OR C5

REFER TO DOUBLE DISC MB50 BALUSTRADE SYSTEM DESIGN TABLE FOR REQUIRED GLASS THICKNESS, FIXING SPACINGS AND FIXING LOADS ACCORDING TO AS/NZS 1170.1:2002 FOR THE OCCUPANCIES LISTED ABOVE.

NOTES: REFER TO DESIGN TABLES AND ELEVATIONS FOR POST FAILURE REQUIREMENTS. INTERLINKING RAIL / CLIPS NOT SHOWN FOR CLARITY. 'H' REFERS TO TOP OF BARRIER.

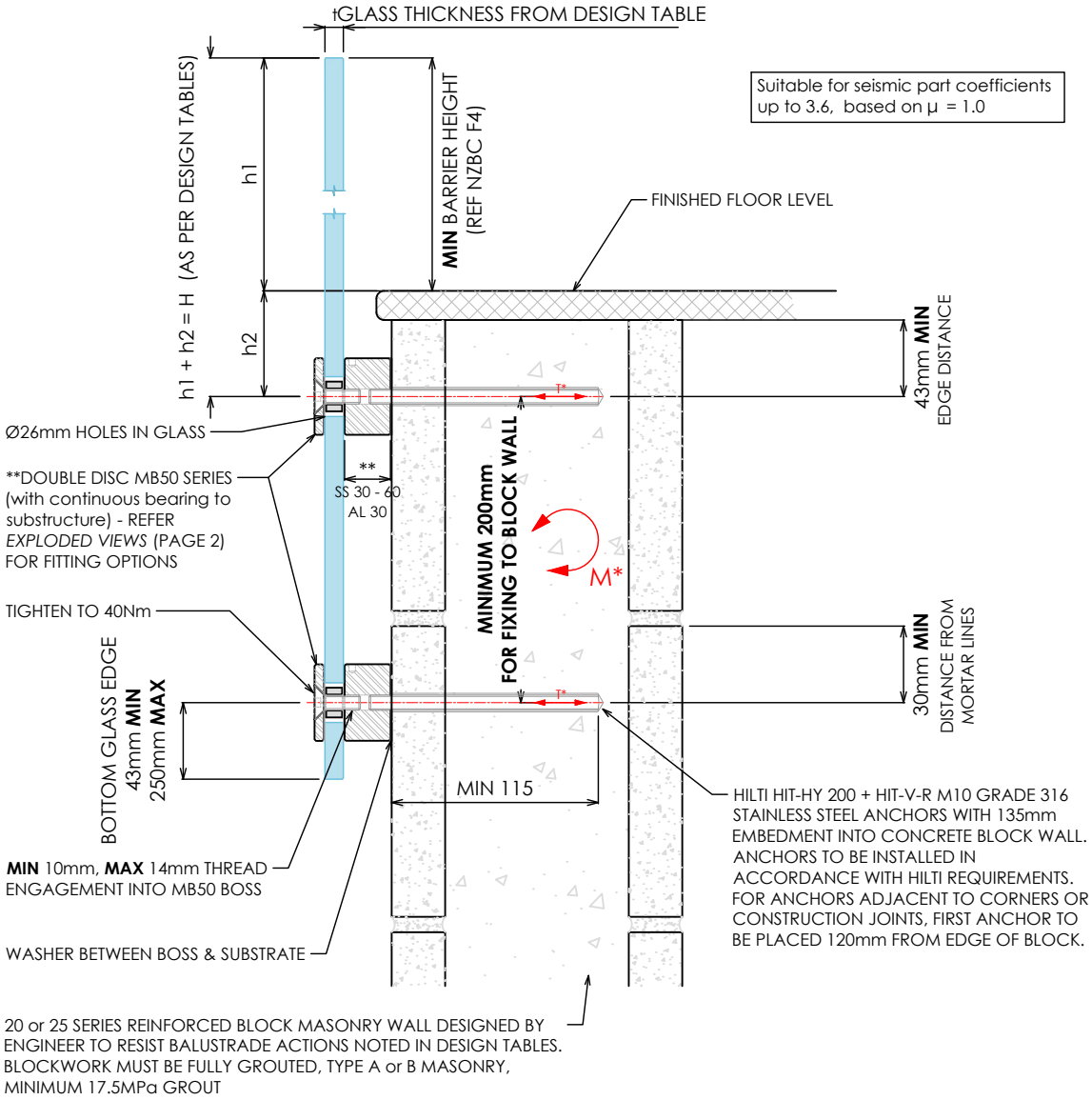

NOTES:

1) Capacity of structure is to be of sufficient strength to support loads M* and T* specified on Double Disc MB50 balustrade system design table. Structure capacity to be verified by building engineer prior to fixing balustrade.
2) max loading to comply with AS/NZS 1170.1:2002 minimum imposed actions for barriers occupancy, shown at top of drawing, for design in accordance with Double Disc MB50 balustrade system design table.
3) Penetration through a membrane must be completed in accordance with written instructions of the membrane manufacturer.
4) No substitution allowed - any variation from the details above and design tables will require specific design.
5) Substructure designed to ensure that there is no water runoff from dissimilar metals or treated timber onto barrier components.

50MM DOUBLEDISC MB50 BALUSTRADE SYSTEM

Steel Fixing Detail

Drawing No.	Revision	Fixing Type	Occupancy
MB50 / S / RN (OPEN)	R10	MB50 with rod & nut	A, B, E, C3

NOT SUITABLE FOR OCCUPANCY C1/C2, D OR C5

REFER TO DOUBLE DISC MB50 BALUSTRADE SYSTEM DESIGN TABLE FOR REQUIRED GLASS THICKNESS, FIXING SPACINGS AND FIXING LOADS ACCORDING TO AS/NZS 1170.1:2002 FOR THE OCCUPANCIES LISTED ABOVE.

NOTES: REFER TO DESIGN TABLES AND ELEVATIONS FOR POST FAILURE REQUIREMENTS. INTERLINKING RAIL / CLIPS NOT SHOWN FOR CLARITY.
'H' REFERS TO TOP OF BARRIER.

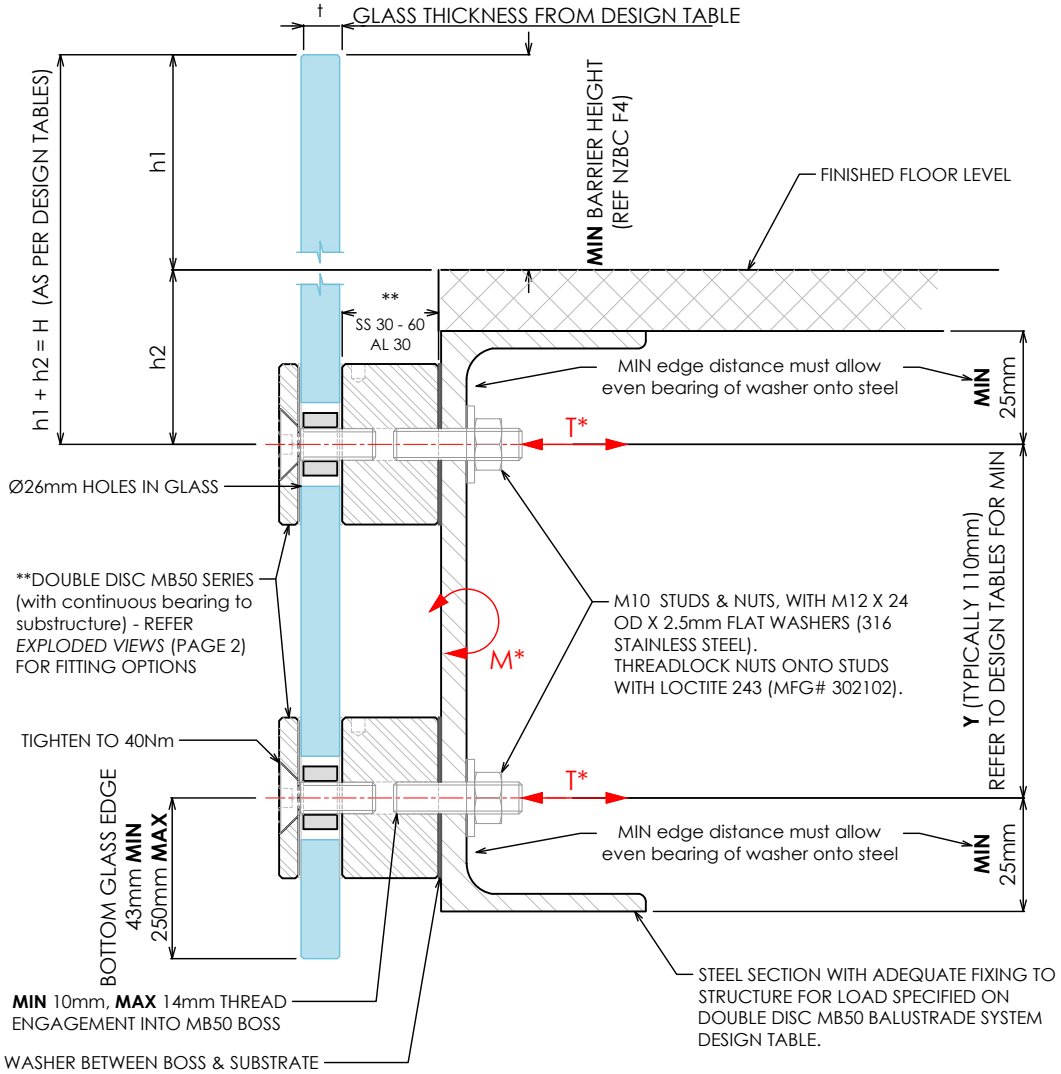

NOTES:
1) Capacity of structure is to be of sufficient strength to support loads M* and T* specified on Double Disc MB50 balustrade system design table. Structure capacity to be verified by building engineer prior to fixing balustrade.
2) Max loading to comply with AS/NZS 1170.1:2002 minimum imposed actions for barriers occupancy, shown at top of drawing, for design in accordance with Double Disc MB50 balustrade system design table.
3) Penetration through a membrane must be completed in accordance with written instructions of the membrane manufacturer.
4) For fixing to steel substrates, the installer shall ensure the bolts are tightened to a "snug-tight" level as defined in NZS3404.
5) No substitution allowed - any variation from the details above and design tables will require specific design.
6) Substructure designed to ensure that there is no water runoff from dissimilar metals or treated timber onto barrier components.

50MM DOUBLEDISC MB50 BALUSTRADE SYSTEM

Steel Fixing Detail

Drawing No.	Revision	Fixing Type	Occupancy
MB50 / S / RN (HOLLOW)	R10	MB50 with rod & nut	A, B, E, C3

NOT SUITABLE FOR OCCUPANCY C1/C2, D OR C5

REFER TO DOUBLE DISC MB50 BALUSTRADE SYSTEM DESIGN TABLE FOR REQUIRED GLASS THICKNESS, FIXING SPACINGS AND FIXING LOADS ACCORDING TO AS/NZS 1170.1:2002 FOR THE OCCUPANCIES LISTED ABOVE.

NOTES: REFER TO DESIGN TABLES AND ELEVATIONS FOR POST FAILURE REQUIREMENTS. INTERLINKING RAIL / CLIPS NOT SHOWN FOR CLARITY.
'H' REFERS TO TOP OF BARRIER.

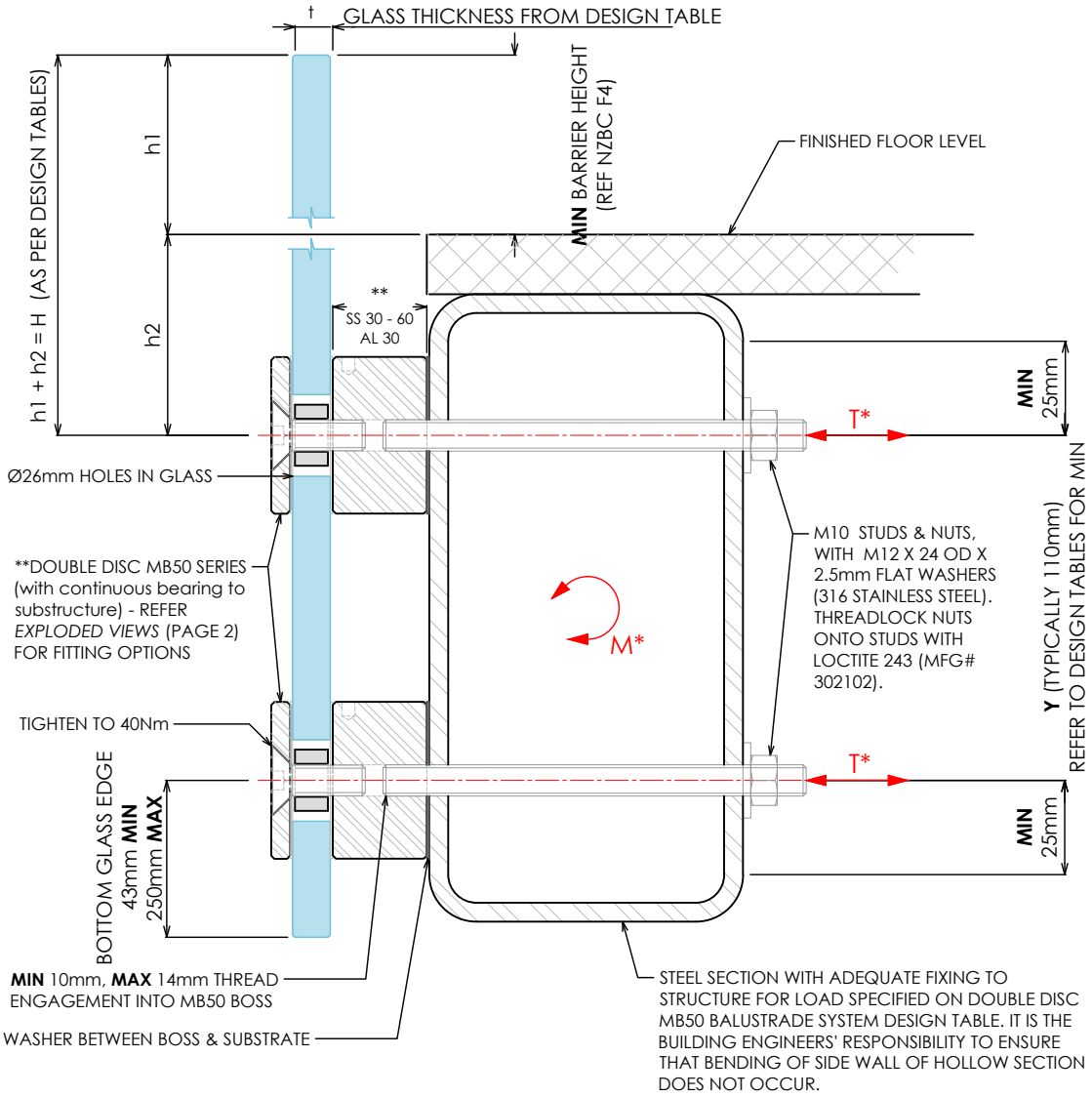

NOTES:
1) Capacity of structure is to be of sufficient strength to support loads M* and T* specified on Double Disc MB50 balustrade system design table. Structure capacity to be verified by building engineer prior to fixing balustrade.
2) Max loading to comply with AS/NZS 1170.1:2002 minimum imposed actions for barriers occupancy, shown at top of drawing, for design in accordance with Double Disc MB50 balustrade system design table.
3) Penetration through a membrane must be completed in accordance with written instructions of the membrane manufacturer.
4) For fixing to steel substrates, the installer shall ensure the bolts are tightened to a "snug-tight" level as defined in NZS3404.
5) No substitution allowed - any variation from the details above and design tables will require specific design.
6)Substructure designed to ensure that there is no water runoff from dissimilar metals or treated timber onto barrier components.

50MM DOUBLEDISC MB50 BALUSTRADE SYSTEM

Timber Fixing Detail

Drawing No.	Revision	Fixing Type	Occupancy
MB50 / T / RN	R10	MB50 with rod & nut	A, B, E, C3

NOT SUITABLE FOR OCCUPANCY C1/C2, D OR C5

REFER TO DOUBLE DISC MB50 BALUSTRADE SYSTEM DESIGN TABLE FOR REQUIRED GLASS THICKNESS, FIXING SPACINGS AND FIXING LOADS ACCORDING TO AS/NZS 1170.1:2002 FOR THE OCCUPANCIES LISTED ABOVE.

NOTES: REFER TO DESIGN TABLES AND ELEVATIONS FOR POST FAILURE REQUIREMENTS. INTERLINKING RAIL / CLIPS NOT SHOWN FOR CLARITY.
'H' REFERS TO TOP OF BARRIER.

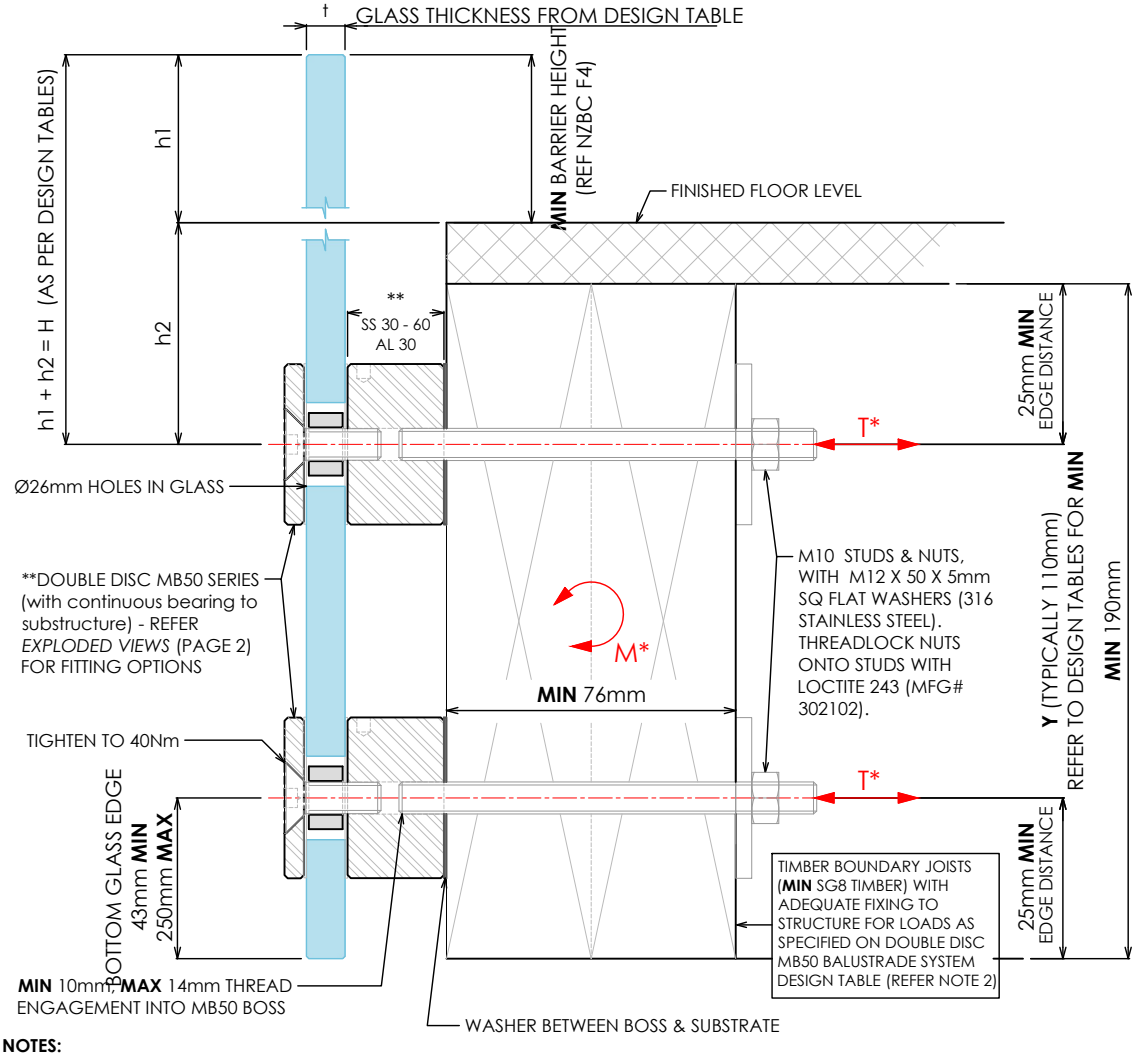

NOTES:

1) Capacity of structure is to be of sufficient strength to support loads M* and T* specified on Double Disc MB50 balustrade system design table. Structure capacity to be verified by building engineer where applicable or checked to NZS3604 requirements prior to fixing balustrade.
2) Timber decks designed to NZS 3604:2011 guidelines will meet loading requirement, **except for decks including cantilever floor joists where specific design is required**.
3) Max loading to comply with AS/NZS 1170.1:2002 minimum imposed actions for barriers occupancy, shown at top of drawing, for design in accordance with Double Disc MB50 balustrade system design table.
4) Penetration through a membrane must be completed in accordance with written instructions of the membrane manufacturer.
5) For fixing to timber substrates, the installer shall ensure that the bolt / coach screw is sufficiently tightened to reduce movement of the bolt head and washer. Care should be taken not to over tighten the fixings that would cause crushing of the timber or compromise the thread leading to anchor pull-out.
6) No substitution allowed - any variation from the details above and design tables will require specific design.
7) Fixings to timber must be re-tightened 2 months after installation and periodically thereafter to allow for timber shrinkage.
8) Substructure designed to ensure that there is no water runoff from dissimilar metals or treated timber onto barrier components.

50MM DOUBLEDISC MB50 BALUSTRADE SYSTEM

Timber Fixing Detail

Drawing No.	Revision	Fixing Type	Occupancy
MB50 / T / LS	R10	MB50 with lag screw	A, B, E, C3

NOT SUITABLE FOR OCCUPANCY C1/C2, D OR C5

REFER TO DOUBLE DISC MB50 BALUSTRADE SYSTEM DESIGN TABLE FOR REQUIRED GLASS THICKNESS, FIXING SPACINGS AND FIXING LOADS ACCORDING TO AS/NZS 1170.1:2002 FOR THE OCCUPANCIES LISTED ABOVE.

NOTES: REFER TO DESIGN TABLES AND ELEVATIONS FOR POST FAILURE REQUIREMENTS. INTERLINKING RAIL / CLIPS NOT SHOWN FOR CLARITY.
'H' REFERS TO TOP OF BARRIER.

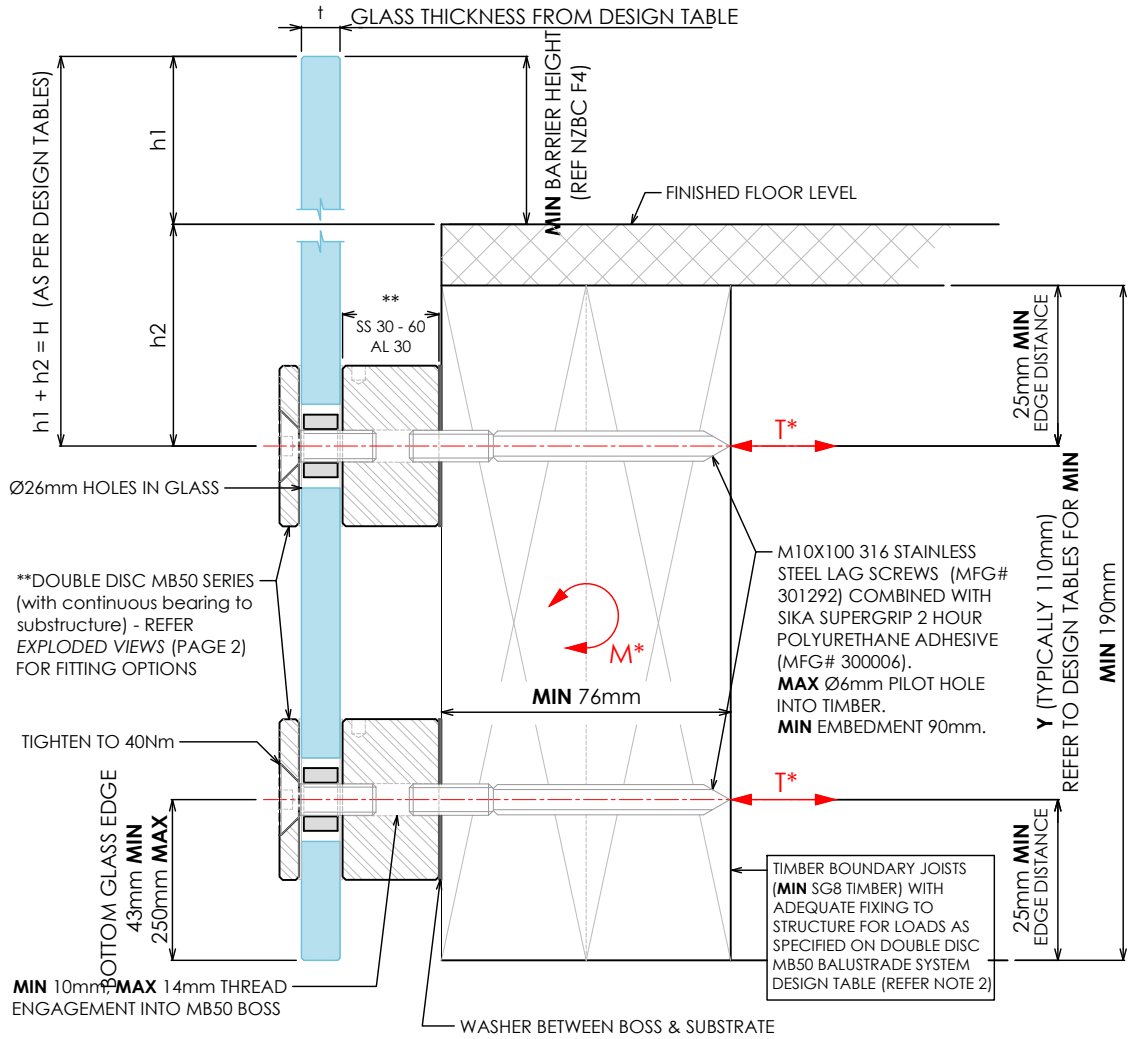

NOTES:

1) Capacity of structure is to be of sufficient strength to support loads M* and T* specified on Double Disc MB50 balustrade system design table. Structure capacity to be verified by building engineer where applicable or checked to NZS3604 requirements prior to fixing balustrade.
2) Timber decks designed to NZS 3604:2011 guidelines will meet loading requirement, **except for decks including cantilever floor joists where specific design is required.**
3) Max loading to comply with AS/NZS 1170.1:2002 minimum imposed actions for barriers occupancy, shown at top of drawing, for design in accordance with double disc mb50 balustrade system design table.
4) Penetration through a membrane must be completed in accordance with written instructions of the membrane manufacturer.
5) For fixing to timber substrates, the installer shall ensure that the bolt / coach screw is sufficiently tightened to reduce movement of the bolt head and washer. care should be taken not to over tighten the fixings that would cause crushing of the timber or compromise the thread leading to anchor pull-out.
6) No substitution allowed - any variation from the details above and design tables will require specific design.
7) Fixings to timber must be re-tightened 2 months after installation and periodically thereafter to allow for timber shrinkage.
8) Substructure designed to ensure that there is no water runoff from dissimilar metals or treated timber onto barrier components.

50MM DOUBLEDISC MB50 BALUSTRADE SYSTEM

Cladding / Fascia Installation Details

CLADDING / FASCIA PANEL DETAIL

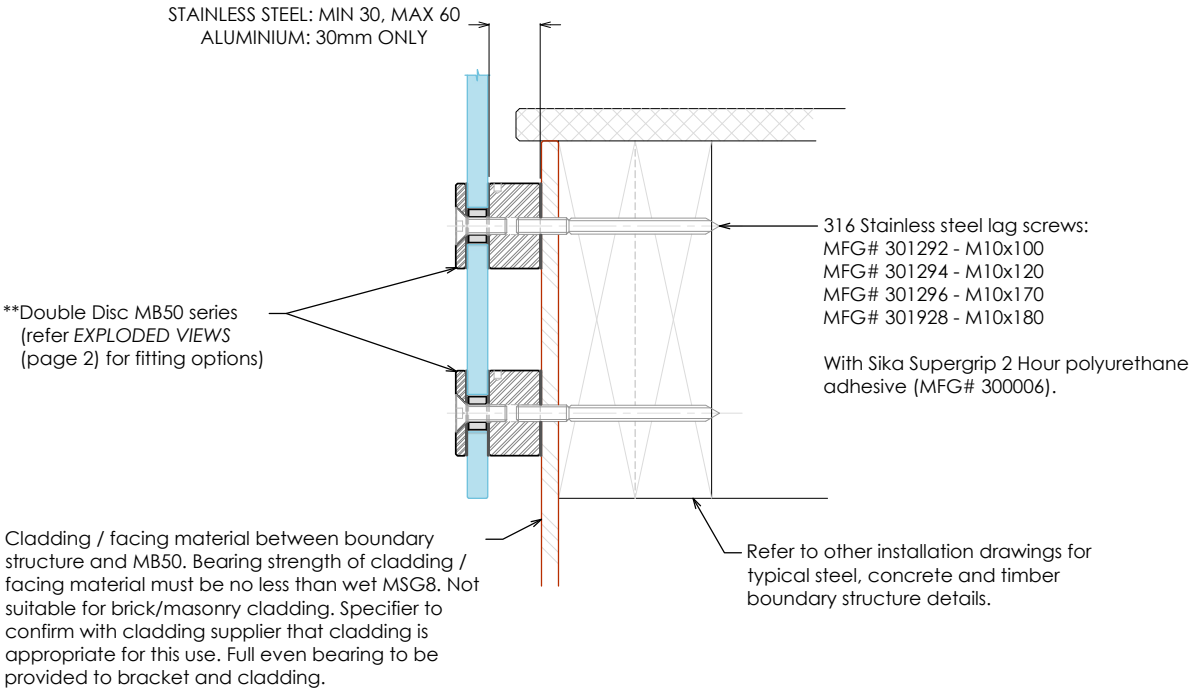

CLADDING / FASCIA PANEL DETAIL WITH CAVITY